WIA

WELDARC 200DC

Stick/TIG Welder

OPERATORS MANUAL | MC113-0

From serial numbers M1132A*

WELD WITH THE BEST. **WELDING.COM.AU**

WELDING INDUSTRIES AUSTRALIA

A Division of ITW Australia Pty Ltd
ABN: 63 004 235 063

1300 300 884
Email: info@welding.com.au
welding.com.au

WELDWELL NEW ZEALAND

A Division of ITW New Zealand
NZBN: 9 429 039 833 129
GST NO: 080177186

0800 9353 9355
Email: info@weldwell.co.nz
weldwell.co.nz

CONTENTS

READ FIRST

The information contained in this manual is set out to enable you to properly maintain your new equipment and ensure that you obtain maximum operating efficiency.

Please ensure that this information is kept in a safe place for ready reference when required at any future time.

When ordering spare parts, please quote the model and serial number of the power source and part number of the item required. All relevant numbers are shown in lists contained in this manual. Failure to supply this information may result in unnecessary delays in supplying the correct parts.

SAFETY

Before this equipment is put into operation, please read the Safe Practices section of this manual. This will help to avoid possible injury due to misuse or improper welding applications.

PLASTIC HANDLES ON POWER SOURCE

Please note that the handle fitted to the Weldarc 200DC inverter is intended for carrying the equipment by hand only.

DO NOT use this handle for suspending or mounting the Weldarc in any other manner.

SAFE PRACTICES WHEN USING WELDING EQUIPMENT

These notes are provided in the interests of improving operator safety. They should be considered only as a basic guide to Safe Working Habits. A full list of Standards pertaining to industry is available from the Standards Association of Australia, also various State Electricity Authorities, Departments of Labour and Industry or Mines Department and other Local Health or Safety Inspection Authorities may have additional requirements. Australian Standard AS1674.2 provides a comprehensive guide to safe practices in welding.

Eye protection

NEVER LOOK AT AN ARC WITHOUT PROTECTION. Wear a helmet with safety goggles or glasses with side shields underneath, with appropriate filter lenses protected by clear cover lens. This is a MUST for welding, cutting, and chipping to protect the eyes from radiant energy and flying metal. Replace the cover lens when broken, pitted, or spattered.

Recommended Shade Filter Lens

Amps	TIG	MMAW	MIG	Pulsed MIG
0-100	10	9	10	12-13
100-150	11	10	10	12-13
150-200	12	10-11	11-12	12-13
200-300	13	11	12-13	12-13
300-400	14	12	13	14
400-500	–	13	14	14
500 +	–	–	14	14

Burn protection

The welding arc is intense and visibly bright. Its radiation can damage eyes, penetrate light-weight clothing, reflect from light-coloured surfaces, and burn the skin and eyes. Burns resulting from gas-shielded arcs resemble acute sunburn, but can be more severe and painful.

Wear protective clothing – leather or heat resistant gloves, hat, and safety-toed boots. Button shirt collar and pocket flaps, and wear cuffless trousers to avoid entry of sparks and slag.

Avoid oily or greasy clothing. A spark may ignite them. Hot metal such as electrode stubs and work pieces should never be handled without gloves.

Ear plugs should be worn when welding in overhead positions or in a confined space. A hard hat should be worn when others are working overhead.

Flammable hair preparations should not be used by persons intending to weld or cut.

Toxic Fumes

Adequate ventilation with air is essential. Severe discomfort, illness or death can result from fumes, vapours, heat, or oxygen depletion that welding or cutting may produce. **NEVER** ventilate with oxygen.

Lead, cadmium, zinc, mercury, and beryllium bearing and similar materials when welded or cut may produce harmful concentrations of toxic fumes. Adequate local exhaust ventilation must be used, or each person in the area as well as the operator must wear an air-supplied respirator. For beryllium, both must be used.

Metals coated with or containing materials that emit fumes should not be heated unless coating is removed from the work surface, the area is well ventilated, or the operator wears an air-supplied respirator.

Work in a confined space only while it is being ventilated and, if necessary, while wearing an air-supplied respirator.

Vapours from chlorinated solvents can be decomposed by the heat of the arc (or flame) to form phosgene, a highly toxic gas, and lung and eye irritating products. The ultra-violet (radiant) energy of the arc can also decompose trichlorethylene and perchloroethylene vapours to form phosgene. Do not weld or cut where solvent vapours can be drawn into the welding or cutting atmosphere or where the radiant energy can penetrate to atmospheres containing even minute amounts of trichlorethylene or perchloroethylene.

Fire and Explosion Prevention

Be aware that flying sparks or falling slag can pass through cracks, along pipes, through windows or doors, and through wall or floor openings, out of sight of the operator. Sparks and slag can travel up to 10 metres from the arc.

Keep equipment clean and operable, free of oil, grease, and (in electrical parts) of metallic particles that can cause short circuits.

If combustibles are present in the work area, do NOT weld or cut. Move the work if practicable, to an area free of combustibles. Avoid paint spray rooms, dip tanks, storage areas, ventilators. If the work can not be moved, move combustibles at least 10 metres away out of reach of sparks and heat; or protect against ignition with suitable and snug-fitting fire-resistant covers or shields.

Walls touching combustibles on opposite sides should not be welded on or cut. Walls, ceilings, and floor near work should be protected by heat-resistant covers or shields.

A person acting as Fire Watcher must be standing by with suitable fire extinguishing equipment during and for some time after welding or cutting if;

- Combustibles (including building construction) are within 10 metres.
- Combustibles are further than 10 metres but can be ignited by sparks.
- Openings (concealed or visible) in floors or walls within 10 metres may expose combustibles to sparks.
- Combustibles adjacent to walls, ceilings, roofs, or metal partitions can be ignited by radiant or conducted heat.

After work is done, check that area is free of sparks, glowing embers, and flames.

A tank or drum which has contained combustibles can produce flammable vapours when heated. Such a container must never be welded on or cut, unless it has first been cleaned as described in AS.1674.2. This includes a thorough steam or caustic cleaning (or a solvent or water washing, depending on the combustible's solubility), followed by purging and inerting with nitrogen or carbon dioxide, and using protective equipment as recommended in AS.1674.2. Water-filling just below working level may substitute for inerting.

Hollow castings or containers must be vented before welding or cutting. They can explode. Never weld or cut where the air may contain flammable dust, gas, or liquid vapours.

Shock Prevention

Exposed conductors or other bare metal in the welding circuit, or ungrounded electrically alive equipment can fatally shock a person whose body becomes a conductor. Ensure that the equipment is correctly connected and earthed. If unsure have the equipment installed by a qualified electrician. On mobile or portable equipment, regularly inspect condition of trailing power leads and connecting plugs. Repair or replace damaged leads.

Fully insulated electrode holders should be used. Do not use holders with protruding screws. Fully insulated lock-type connectors should be used to join welding cable lengths.

Terminals and other exposed parts of electrical units should have insulated knobs or covers secured before operation.

1 INTRODUCTION

MMAW (Stick Welding)

Manual Metal Arc Welding (MMAW) is a process where an arc is struck between a flux-coated consumable electrode and the work piece. The arc and the weld pool are both shielded by gases generated by the flux coating of the electrode.

The Weldarc 200DC has been designed to be used with 2.0mm, 2.5mm, 3.2mm and 4.0mm diameter electrodes. The smaller electrodes are used when welding at lower currents, such as sheet metal applications. Increasing the electrode diameter permits higher welding currents to be selected.

WIA supplies a wide range of mild steel and special purpose electrodes which cater for home workshop, rural, and industrial requirements. Some popular AUSTARC electrodes are listed below. The correctly selected AUSTARC electrode will influence the quality of the weld, and the stability of the arc.

Austarc 12P, Classification E4313-A

A popular general purpose electrode used with ease in all positions, vertical up or down. The smooth forceful arc makes it an ideal electrode for all general mild steel applications.

Austarc 13S, Classification E4313-A

A smooth running electrode with a soft arc, particularly suited to light sheetmetal and smooth mitre fillet welds.

Austarc 16TC, Classification E4916-A

A low hydrogen electrode with good arc stability and out-of-position welding characteristics. This electrode is ideal for medium carbon steels, or steels of unknown analysis.

Unicord 312, Classification ES312-16

A high tensile, chromium nickel electrode specially formulated for joining all alloy steels and irons, and for tool and die maintenance.

Staincord 316L-016, Classification E316L-16

For quality all position stainless steel welding. Extra smooth running, high arc stability, easy re-strike, excellent slag removal and bead appearance.

Staincord 309Mo-16, Classification E309LMo-16

For high quality all position stainless steel welding. This extra low carbon alloy is specifically indicated for AISI 309Mo type alloys, but is also ideal for joining mild/low alloy steel to a range of 300 and 400 series stainless steels. Features extra smooth running, high arc stability, easy re-strike, excellent slag removal and bead appearance.

GTAW (TIG Welding)

Gas Tungsten Arc Welding (GTAW) is a welding process where the arc is struck between a non-consumable tungsten electrode and the work piece. A ceramic nozzle surrounds the tungsten electrode and directs a flow of inert gas, usually Argon, over the electrode and the weld zone. If filler metal is required, it is hand fed into the welding arc. The DC current output of the Weldarc inverter is suitable for welding most ferrous and non-ferrous metals.

2 RECEIVING

Check the equipment received against the shipping invoice to make sure the shipment is complete and undamaged. If any damage has occurred in transit, please immediately notify your supplier.

The Weldarc inverter package contains;

- Weldarc Inverter Power Source
- Twist-lock Electrode Holder 4m
- Work Clamp 3m
- (This) Operating Manual
- TIG Torch Complete with 8m cable with twist-lock connection.
- TIG Consumable KIT
- Argon flow gauge regulator REG003
- Gas hose

3 FEATURES

3.1 Fan on Demand

The machine has Fan on Demand feature. The fan will only operate when the temperature rise requires cooling. The Fan will run during power up, and power down.

3.2 Voltage Reduction Device (VRD)

Whenever the welding output of the Weldarc inverter is open circuit (ie not arcing), the voltage across the welding leads is reduced to a safe level. This provides an increased level of safety to the welding operator during operations such as changing the electrode.

The “VRD SAFE” indicator on the front panel is on to confirm the output is in the safe condition.

The term VRD refers to a “Voltage Reducing Device”which complies with AS1674.2 for Category “C” conditions.

The machine will be supplied with VRD enabled or disabled, depending on the end market.

VRD Disabled

The open circuit output voltage is maximum Volts DC. The ‘VRD SAFE’ indicator on the front panel will only light up momentarily during power up. Machine is supplied with an orange tag on the supply lead advising VRD is disabled.

VRD Enabled

When not welding the ‘VRD SAFE’ indicator on the front panel will come on and the output voltage will be reduced to approximately 23V, which is below the required safe level of 35V DC.

Change VRD Function

If the VRD function does not suit the application, the VRD can be enabled or disabled by an authorised WIA service agent.

3.3 Power Factor Correction (PFC)

PFC provides an input power conditioner system to smooth the input current.

On a conventional inverter machine the input current presents in short high current pulses every half mains cycle. These pulses, cause input voltage drop, on extension leads and generators.

The PFC spreads the current pulse over the whole mains cycle.

The overall effect is PFC provides stable operation, on challenging power supplies, particularly on long supply leads & generators.

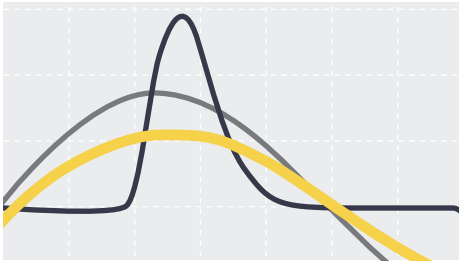

INPUT VOLTAGE | **INPUT CURRENT WITH PFC** | **INPUT CURRENT WITHOUT PFC**

4 SPECIFICATIONS

Manufactured to Australian Standard AS60974-1
IEC60974-10 6.3.2 6.3.3.

Term	Value
Rated Input Voltage	220 - 240 V
Power Frequency	50/60 Hz
Rated Input Capacity	6 KVA
Generator Capacity	6 kVA Peak
Rated Maximum Supply Current Imax	25 A
Maximum Effective Supply Current Ieff	14 A
Output No Load Voltage	78 V
Supply Main Circuit Breaker	30 A
Supply Cable 2.5mm2 & Plug Rating	15 A
Extension Lead Rating	15 A
Open Circuit Voltage	VRD Enabled: Uo = 14 V VRD Disabled: Uo = 78 V
Rated Output @ 40°C	
Stick MMA	180 A @ 27.2 V 30% Duty 127 A @ 25 V 60% Duty 99 A @ 24 V 100% Duty
TIG	200 A @ 18 Volts 30% Duty 141 A @ 15.6 V 60% Duty 110 A @ 14.4 Volts 100% Duty
Current Up Slope Time	0 - 10 S
Current Down slope Time	0 - 10 S
Pulse Frequency	0.2 - 500 Hz
Pulse Ratio Width Adjustment	5 - 95 %
Arc Force Control MMA	0-100% of preset value
Arc Start MMA	0-100%
Post Gas Time	0.5 - 15 S
Pre Gas Time	0 - 5 S
Cooling Type	Fan on Demand
Efficiency	≥ 85% n
Power Factor	0.99 Cos§
Insulation Degree	H

4 SPECIFICATIONS (CONT.)

Term	Value
Cover Protection Degree	IP23S
Weight	12kg
Shipping Weight	23kg
Dimension L × W × H	500 mm x 215 mm x 345 mm
Shipping Dimension L × W × H	690 mm x 320 mm x 440 mm

5 CONTROLS

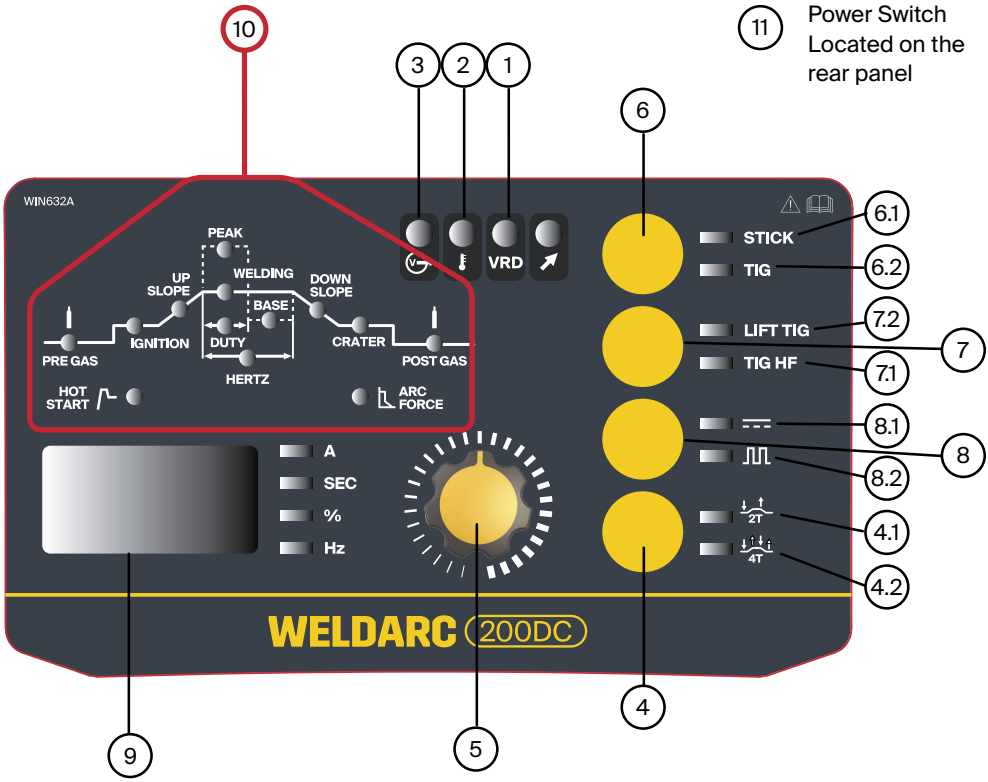

Fig 1 Weldarc 200 DC Controls

1 VRD Safe Mode Indicator

When the machine is in MMA stick mode the light will be on when the voltage across the output terminals is reduced to safe level. The VRD will operate in accordance the requirements of AS1674.2 Category C Environment.

2 Over Temperature Indicator

This light will come on if any internal thermal protection devices have operated due to overheating, caused by the duty cycle being exceeded.

The machine will not weld but the fan will continue to operate to cool the machine. When a safe temperature has been reached, the thermal protection device will reset and welding can continue.

5 CONTROLS

3 Power On

This light will be on when the input supply is turned on.

4 Latch Mode 2T/4T

Latch mode provides a 2 STEP or 4 STEP trigger control while in TIG mode:

4.1 2 Step

In this mode the torch trigger must be pressed on to initiate welding and held on till welding is finished.

Up slope and down slope, ignition current and crater current cannot used in the 2 STEP.

4.2 4 Step

In this mode the torch trigger switch is pressed to start the arc.

After PRE-GAS time the Arc will initiate. The current will stay at the ARC IGNITION setting.

When trigger is released the current will increase to the WELDING CURRENT setting, according to the UP SLOPE time.

Output will continue at WELDING CURRENT setting.

When torch trigger is pressed again then the weld output will decrease down to CRATER CURRENT setting, according to the DOWN SLOPE time.

Weld output will remain at CRATER CURRENT until torch trigger is released, then gas will flow for POST GAS time.

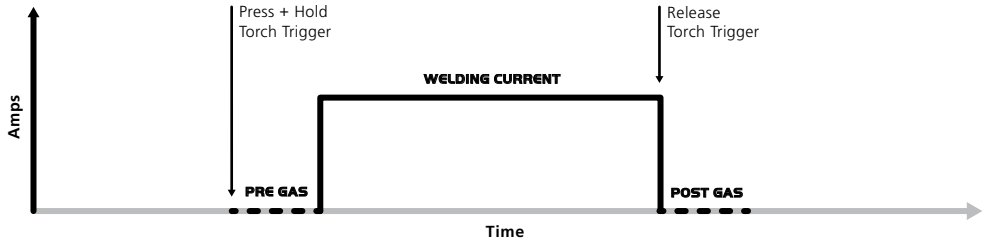

Fig 2 Latch Mode–2 STEP

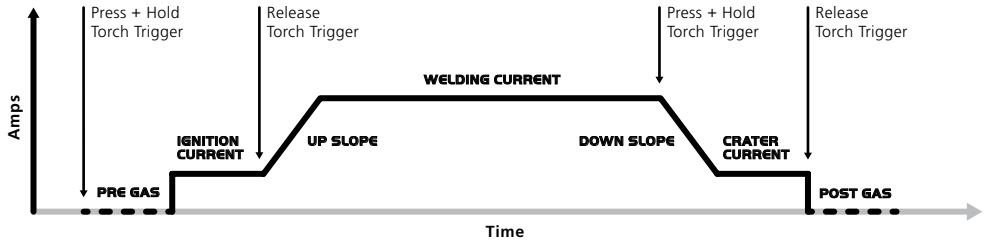

Fig 3 Latch Mode–4 STEP

5 Adjustment Knob

This knob is used to adjust welding parameters.

The knob primary function is to adjust the welding current. Turning the knob will adjust the weld current which is indicated on the digital display.

Press and release the knob, will select one of the additional welding parameters (see 10) The selected parameter indicator will be lit and then the parameter can be adjusted by turning the knob. The parameter indicator is held for about 4 seconds before reverting back to normal current adjustment mode.

6 Weld Mode Selection

The Weld Mode can be selected between the two mode of operation.

6.1 Stick MMA Mode

In this mode the machine performs as a DC stick MMA welding machine. The HOT START and ARC FORCE parameters can be adjusted on the front panel by pressing the Adjustment Knob then rotating to change.

6.2 TIG Mode

In this mode the machine will perform as a DC TIG machine.

7 TIG Start Mode

Use This mode to select between High Frequency (HF) start, or LIFT TIG start.

7.1 High Frequency (HF) arc start is when the tungsten is near the work piece and the torch trigger is pressed, then a high energy spark is created to jump from the tungsten to work piece and initiate an Arc.

7.2 Lift TIG start the tungsten is touched to the work piece and lifted to then start the arc.

8 Pulse Mode

The machine can operate with:

8.1 Flat DC output or

8.2 Output that Pulses between two DC currents. In Pulse TIG the parameters for adjusting the pulse shape will be available for adjustment.

Peak Current, Pulse Ratio, Frequency Hertz, and Base Current can be adjusted, refer to 10.5

Pulse mode can be used for thin plate welding, maintaining good penetration, but with reduced Heat Effected Zone.

9 Amps Display

The digital display will show Amps while adjusting current with knob 5, and then display weld Amps while welding is in progress.

5 CONTROLS

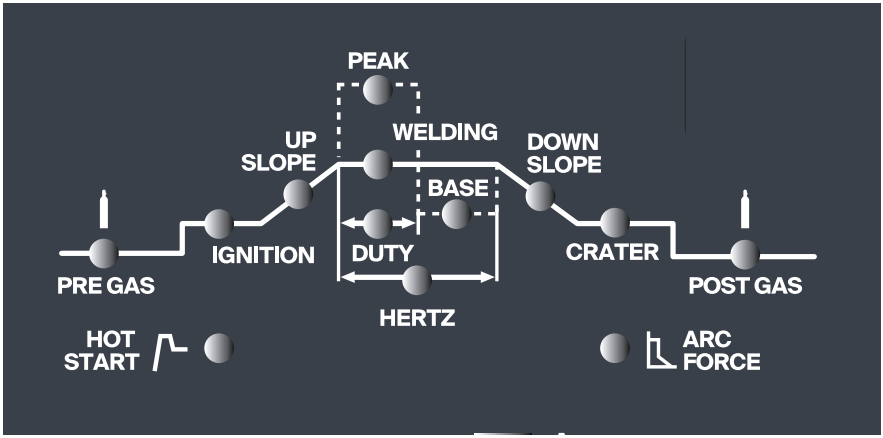

Fig 4 Weldarc 200 DC Welding Parameters

10 Welding Parameters

Press Adjustment Knob (5) to access welding parameters.

10.1 Pre Gas

Pre gas flow can be set to a maximum of 5 seconds, to allow gas flow before Arc Start.

10.2 Ignition Current

While in 4 STEP latch mode the arc will start and maintain the Ignition current output until the trigger torch is released.

The IGNITION CURRENT is adjusted 0-100% of the WELD CURRENT setting.

10.3 Up Slope

The UP SLOPE time is the time taken for the weld current to transition from the IGNITION CURRENT value to WELD CURRENT value. The time can be adjusted from 0 to 10 seconds.

10.4 Welding Current

The setting for actual weld current.

10.5 Pulse Welding

Pulse welding allows the current to be pulsed between two different values, the frequency and ratio can be adjusted. This feature can be used on thin material.

10.5.1 Peak Current

Set the Peak current Amps when in pulse mode.

10.5.2 Pulse Duty

Set the ratio in % for the peak current compared to the back ground current. Range is 5% to 95%.

10.5.3 Hertz

The frequency of the pulse can be set, as number of pulses per second (Hertz) 0.2Hz to 500Hz.

10.5.4 Base Current

Set the Base current Amps when in pulse mode. The Base Current can be adjusted to 10 to 95% of the Peak Current.

10.5.5 Down Slope

The DOWN SLOPE time is the time taken for the weld current to transition from the WELDING CURRENT value to CRATER CURRENT value. The time can be adjusted from 0 to 10 seconds.

10.5.6 Crater Current

The current at the end of WELD can be adjusted to a value which will allow controlled finish of the weld. The end of weld pool (Crater) can be filled.

10.5.7 Post Gas

The Post Gas time can be adjusted to allow gas to flow after weld has stopped. This feature can be used to provide a gas shield to the cooling weld pool. Adjustable from 0 to 15 seconds.

10.6 Arc Force

When machine is in Stick MMA mode, selecting the ARC FORCE allows adjustment of the increase in current that will occur when the arc starts to short circuit, or snap out. Adjusting this value can be useful when using cellulose electrodes.

The amount of current is preset, the adjustment is a % of the preset value.

10.7 Hot start

When machine is in Stick MMA mode, selecting HOT START allows adjustment of the increase in current that will occur at Arc Start HOT START is useful for getting arc established on a cold start. The amount of current is preset, the adjustment is a % of the preset value.

11 Power On/Off Switch

In the OFF position, this switch isolates the power source from mains power supply. The switch is located on the rear panel.

5 CONTROLS

12 Remote Control Adjustment

The output current of the machine can be controlled remotely by On/ Off trigger switch control and current control adjustment, located in the torch hand piece, or in foot control.

The Remote control adjustment will allow minimum to 100% of the current setting on the machine.

For example if the machine is set to 150A the remote adjustment will adjust 10-150A.

12.1 TIG torch used for remote control adjustment

The TIG torch will require a trigger switch and current control potentiometer in the hand piece.

Control plug of the TIG torch is connected to the machine remote control socket FIG 7.

Turn the machine on.

First the machine needs to be adjusted to maximum desired current.

To do this the remote control knob on the TIG torch needs to be adjusted to maximum.

Adjust to the desired maximum current (such as 150A) on the machine with the control knob FIG 1 (5). The AMPs digital display will then show 150A.

Adjust the control knob on the TIG torch, the AMPS display will then change as the knob is adjusted.

12.2 Foot Control for remote control adjustment

The WIA foot control (part number AA76) has an in built trigger switch and current control and can be used to control the weld start and weld current.

Control plug of the TIG torch is connected to the machine remote control socket FIG 7.

Turn the machine on.

First the machine needs to be adjusted to maximum desired current

Select LIFT TIG MODE to prevent HF during setup.

Press the foot control pedal to maximum.

Adjust to the desired maximum current (such as 150A) on the machine with the control knob FIG 1 (5). The AMPs digital display will then show 150A.

Release the foot control pedal and the current will adjust down from 150A to 10A.

HF MODE can now be selected if required.

6 INSTALLATION

Do Not Touch Live Electrical Parts

Touching live electrical parts can cause fatal shocks or severe burns. The electrode and work circuit is electrically live whenever the output is on. The input power circuit and machine internal circuits are also live when power is on. In semi-automatic wire welding, the wire, wire reel, drive roll housing, and all metal parts touching the welding wire are electrically live. Incorrectly installed or improperly grounded equipment is a hazard. Do not touch live electrical parts. ELECTRIC SHOCK can kill. Wear dry, hole-free insulating gloves and body protection. Insulate yourself from work and ground using dry insulating mats or covers big enough to prevent any physical contact with the work or ground.

Connection to Electrical Mains Power Supply

The Weldarc 200DC is fitted with a 15 Amp plug, recognisable by a wide earth pin. Power supply authorities require that equipment fitted with a 15 Amp plug shall ONLY be connected to a 240 Volt, 15 Amp power point. DO NOT modify the plug.

The minimum capacity of the main power supply wiring and power outlet supplying a welder is selected according to the Effective Primary Current of the equipment. Refer to Section 4.

The minimum recommended main power supply circuit breaker ratings for the Weldarc 200DC inverters are listed in Section 4.

If it becomes necessary to replace the mains flexible supply cable, use only cable with correct current rating. See Section 4.

If it is necessary to use an extension power supply cable, ensure that it is rated as per Section 4. Voltage drop which will occur over long lengths of cable will reduce the maximum welding current available from the equipment.

This machine has PFC feature. If the mains voltage supply is low, the PFC will require more mains current to provide the necessary weld power. Therefore, low mains voltage or mains voltage drop will increase mains current.

Successful Operation

Welding equipment at maximum output require high current during operation, then minimum current during idle time.

Mains supply circuit breaker tripping can sometimes occur.

Successful operation will depend on a number of factors:

- Variation in circuit breaker thresholds.
- Ambient temperature.
- Number of previous circuit breaker operations.
- Actual weld conditions, resulting in higher weld currents.
- Repeated starts can result in repeated surge currents raising circuit breaker threshold.
- Low supply voltage, resulting in higher supply current.

Repeated Circuit breaker operation at weld start can sometimes be overcome by using a “D” curve circuit breaker.

To reduce nuisance tripping, a higher rated circuit breaker can be selected, but the supply circuit wiring capacity must be increased to suit.

Connection to Generator

The Weldarc 200DC can be operated from a generator. The PFC feature will allow greater tolerance to variable generator outputs. However, it is not recommended that the equipment be powered from small engine-driven generator sets unless they have adequate voltage regulation. Poor regulation results in peaks of supply voltage which can occur with some equipment of this type. Excessive voltage peaks can damage the circuits of the welder.

Generators used to power this equipment must have the recommended minimum capacity and incorporate output voltage regulation.

Due to variation between generators by different manufacturers, it is impossible for WIA to validate operation from all generators. Therefore, correct operation of welding equipment on the generator should be confirmed by the manufacturer, before purchasing the generator.

7 BASIC WELDING INFORMATION

Stick Welding (MMAW)

Connection for Stick Welding

It is important to select the electrode polarity in accordance with the manufacturers recommendations for that electrode. Most common electrodes, including cellulose types, are operated with the electrode at positive polarity, as illustrated in Figure 6.

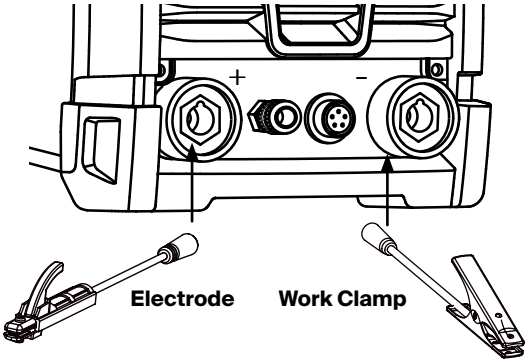

Fig 6 Connections for Stick Welding (MMAW)

Stick Welding

Be certain that you are wearing suitable protective clothing, gloves etc and that you are working in a non-hazardous area. If necessary, refer again to **Section 1** - **Safe Practices** in this manual.

Connect the work clamp to the work piece. Place the desired electrode in the electrode holder.

Turn on the power switch located on the rear panel. Wait approximately 5 seconds as the unit goes through its initiation sequence.

Use the Weld Mode Selection button to select Stick Mode.

Select an appropriate welding current for the electrode diameter by setting the knob on the machine front panel. WIA AUSTARC electrodes will give the best results.

To strike the arc, drag the end of the electrode along the work piece as if striking a match. As the arc initiates, lift the electrode slightly away, aiming to establish an arc length of approximately 3mm.

As the electrode end is consumed, feed the electrode into the arc in order to maintain arc length. As a general rule, the arc should be held as short as possible while still giving stable burn off and good weld appearance. An arc which is too long causes an unwieldy flow of metal with a rough weld appearance and reduced penetration. An arc too short leads to a narrow weld deposit and “stuttery” arc characteristics, and the electrode is liable to freeze onto the work piece.

As the solidified weld deposit forms, move the end of the electrode slowly along the weld path, aiming to maintain a pool of molten weld metal behind the arc. Decreasing this rate of travel will result in a wider weld deposit, and similarly increasing it will narrow the weld deposit.

Always fill the crater which tends to form at the end of a weld deposit, by pausing momentarily before withdrawing the electrode to break the arc. Unfilled craters are a point of weakness, and can lead to weld cracking.

Current Range for General Purpose Electrodes

Diameter (mm)	Current (Amps)
2.0	40 - 60
2.5	60 - 85
3.2	90 - 130
4.0	130 - 180

7 BASIC WELDING INFORMATION

TIG Welding (GTAW)

Connection for TIG Welding

For TIG Welding, the TIG torch is connected to the negative terminal. Figure 7 illustrates the correct connection of the welding torch and gas supply. Welding grade Argon is the shielding gas most commonly used for DC GTAW welding. The torch will require a tungsten electrode.

Before first use of the welding torch, allow gas to purge the torch and hoses for 1 minutes at approximately 10 litres/min. For welding purposes, the gas flow rate should be set in the range 5-11 litres/min.

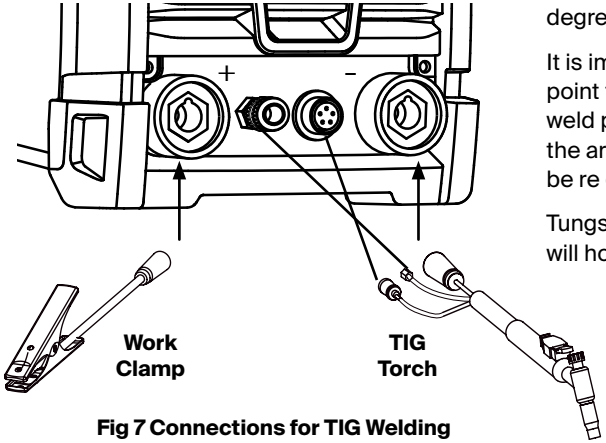

Fig 7 Connections for TIG Welding

Electrode TIG

Thoriated Tungsten electrodes are normally used for DC welding current.

Tungsten Electrode Preparation

The tungstens needs to be ground to a point, the grinding should only be in the direction of the point and should be done on a fine grit grinding wheel. The resulting grind pattern will produce a sharp directed arc. Poor tip preparation will result in arc wander.

A common practice is to grind the tip such that the length of the points is approximately 2 times the diameter. The result will be an included angle of 30 degrees.

It is important to maintain the electrode point for DC. If the tip accidently touches weld pool it will become contaminated and the arc will become erratic, and will need to be re ground.

Tungstens containing at least 2% lanthana will hold a point when used for DC TIG.

Tungsten Current Ranges

Electrode Diameter (mm)	Gas Cup Size	DC Current Amps	Filler Wire Diameter (mm)
1.0	6	15-80	1.6
1.6	6	70-150	1.6-2.4
2.4	8	150-250	2.4-3.2

Safety Consideration Thoritated Tungsten.

Thoriated Tungsten contains the element Thorium (Th). Thorium is a radioactive element which mainly emits alpha particles. Alpha particles cannot penetrate skin, or clothing, but can be a harmful carcinogen if released inside the digestive tract, or lungs.

There is almost no release of radioactive material during arcing.

There is no significant hazard in handling and storage. The Thoria is inside the tungsten electrode, it is enclosed in a tungsten matrix and so there is little radiation emitted externally.

The greatest risk of exposure is during the grinding of the thoriated tungsten electrodes. Care needs to be taken, to control the dust. A dust mask should be worn, and grinder area clean up should be done with a vacuum cleaner.

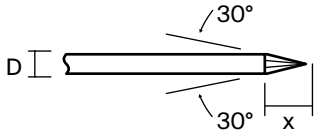

Fig 8 Tungsten Preparation
x = 1.5 to 4 times diameter
(2 x D = 30° included angle)

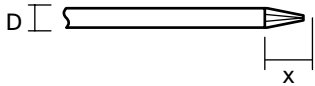

Fig 9 AC Advanced Preparation
x = 1.5 to 4 times diameter

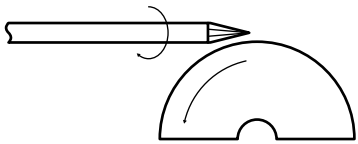

Fig 10 Correct Grind Direction

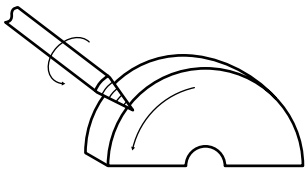

Fig 11 Incorrect Grind Direction

7 BASIC WELDING INFORMATION

TIG Welding Operation

Connect the Work Clamp to the work piece.

Turn on the power switch located on the rear panel. Wait approximately 5 seconds as the unit goes through its initiation sequence.

Use the Weld Mode Selection Switch to select LIFT TIG or HF TIG Mode.

Select an appropriate welding current for the job by setting the knob on the machine front panel.

HF Start

When HF Start TIG is selected then the electrode tip is bought close to the work piece, but not touching.

Pressing the trigger will produce a high voltage spark that will jump to the work piece and initiate an arc.

HF TIG can be used where work piece contamination by the electrode is a concern. Also where repetitive starts causes contamination of the electrode, which produces an unstable arc.

LIFT TIG Operation

When the Welding mode is set to LIFT TIG then the arc start can be achieved with the following procedure.

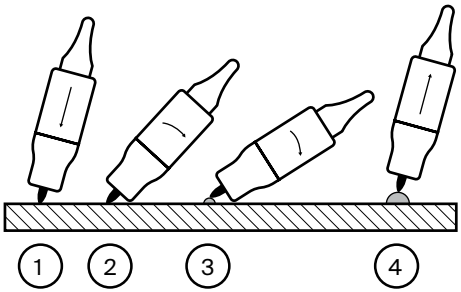

Fig 12 Lift TIG Operation Procedure

1 Touch the electrode lightly against the work piece.

2 Press the torch trigger switch. The shielding gas will start to flow and a small current will pass through the electrode.

3 While still holding the electrode against the work piece, roll the hand piece over until the cup rests on the work piece.

Use the cup as a pivot point to roll the hand piece over allowing the electrode to lift of the work piece.

The arc will ignite.

4 Immediately lift the cup of the work piece, the current will rise to the welding level within the up-slope time.

Use of a copper striking plate can be used to avoid electrode contamination. The electrode can also be contaminated by contact with the filler rod. A contaminated electrode produces an unstable arc. If this occurs regrind the electrode tip.

8 GENERAL MAINTENANCE

Before removing the power source covers, ENSURE that the equipment is disconnected from the mains power supply. When the equipment is energised LETHAL VOLTAGES are present on the electrical components enclosed.

Dust

Care should be taken to prevent excessive build-up of dust and dirt within the welding power source. It is recommended that at regular intervals, according to the prevailing conditions, the equipment covers be removed and any accumulated dust be removed by the use of a dry, low pressure compressed air, or a vacuum cleaner. The machine should be blown out with compressed air at least every 12 months as grinding dust can settle on PCB componentry causing failure. Failure to maintain machines may void warranty.

9 EXTERNAL TROUBLE SHOOTING

If you are in Australia and the following checks do not identify the fault condition, the equipment should be returned to a WIA Service agent. Phone 1300 300 884 for details of your nearest service agent.

If you are in New Zealand and the following checks do not identify the fault condition, the equipment should be returned to the original place of purchase with proof of purchase, or contact Weldwell on 06 8341 600.

10 TROUBLE SHOOTING CHART

Problem	Likely Reason	Outcome
All Inverter Multi-Process Models		
No welding current, no display.	The machine is not turned on at both the mains supply and the machine power switch.	If confirmed that the machine is switched on correctly, test the same outlet using a known serviceable appliance.
Circuit breaker nuisance tripping during welding.	Circuit breaker inadequately rated, or duty cycle exceeded.	The circuit breaker may be rated for Ieff (effective current). Welding machines can draw considerable amounts more than the effective current at maximum. The duty cycle should be observed and understood.
Machine continually cuts out on thermal overload	The machine duty cycle has been exceeded.	Leave the machine energized, with the fan running until the machine has cooled sufficiently. The duty cycle should be observed and understood.
No welding current, display on.	The connections may not be made securely.	Ensure all connections are in position and securely made.
Machine gives poor quality weld.	The polarity of the electrode/ return cables is incorrect.	Polarity should be confirmed for the process/wire type in use.
	The return lead contacts, or workbench surface requires cleaning.	The return lead contacts and connections should be inspected and cleaned, and the workbench cleared of waste materials.
Machine works fine on mains power but does not work when connected to a generator.	Incompatibility of the welding machine and the generator.	Generators and inverter welding machines can have compatibility issues due to the run up/down cycles of generators.
Machine works fine on mains power but does not work when connected with extension lead.	Extension leads in use creating additional resistance.	The extension leads may also contribute to considerable volts drop, making the welder inoperative.

Problem	Likely Reason	Outcome
MMA/STICK Models		
In MMAW (Stick), the arc is difficult to strike.	The technique required for VRD enabled welding machines is not the same as earlier stick welding units	The technique to strike should be reviewed, not as a 'strike' but more as 'touch, twist, lift' motion. Disabling of the VRD could enable an easier weld start.
GTAW/TIG Models		
Tungsten burns up on arc start.	The polarity of the electrode/ return cables is incorrect.	Polarity should be confirmed for the process/wire type in use.
The weld has small black 'lumps' or 'dots' appearing in the pool. Cleaning is poor.	Old or dirty filler rods can often be the cause of 'dirty' TIG welding operations.	Switching filler rods to another type or batch may solve this issue.
Weld is contaminated with small bubbles (presence of porosity).	The gas hose is not securely connected at the machine or at the regulator.	Ensure the gas connections from regulator through to the torch connection are suf-ficiently tightened.
Presence of porosity at weld start.	The torch gas hose has not been purged sufficiently.	Purge the system and confirm sufficient gas flow through the regulator.

11 SERVICE INFORMATION

If the welding machine requires service or repair, take the machine to an authorized service agent.

Australian service agents can be located on the welding.com.au website.

Alternatively call customer service;
Australian 1300 300 884
New Zealand 0800 9353 9355

When contacting a service agent please have an accurate description of the fault, and the machine serial number located on the base on the machine.

M1132A.....

CAUTION: The following information is intended for use by qualified service personnel. When the unit is energised LETHAL VOLTAGES are present on the electrical and electronic components. It is not intended that persons without suitable training and knowledge attempt to perform service tasks on the components of this welder.

Before removing the equipment cover, ENSURE that the equipment is disconnected from the mains power supply. When the equipment is energised LETHAL VOLTAGES are present on the electrical components enclosed.

If the supply cable is damaged it must be replaced by the manufacturer, their service agent or a similarly qualified person.

IMPORTANT NOTICE: Warranty may be voided if equipment is powered from an unsuitable engine driven generator.

Generators used to power this equipment must have a minimum rated capacity as per Section 4 and incorporate output voltage regulation. Due to variation between generators by different manufacturers, it is impossible for WIA to validate operation from all generators. Therefore, we recommend that operation of equipment on the generator is received from the manufacturer before purchasing the generator.

The electrical components of the equipment are shown in the circuit diagram below. The Weldarc inverter is an inverter type design, where the mains supply is first rectified, passed through a PFC boost circuit, filtered then chopped to a high frequency before being applied to the welding transformer. The output of this transformer is rectified to form the welding output of the machine.

11.1 CIRCUIT DIAGRAMS – POWER SOURCE

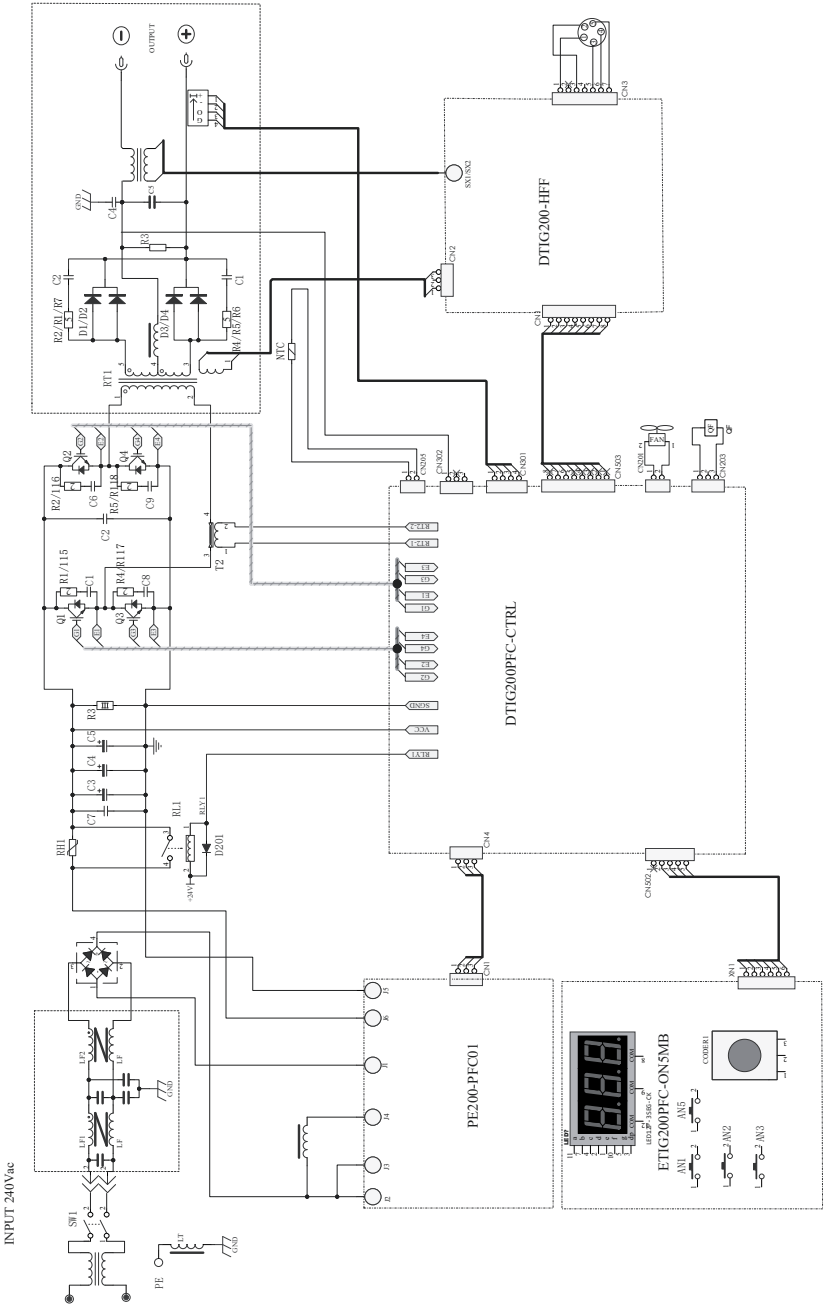

Fig 13 Weldarc 200 DC Circuit Diagram

12 ASSEMBLY & PARTS LIST - WELDARC 200DC POWER SOURCE

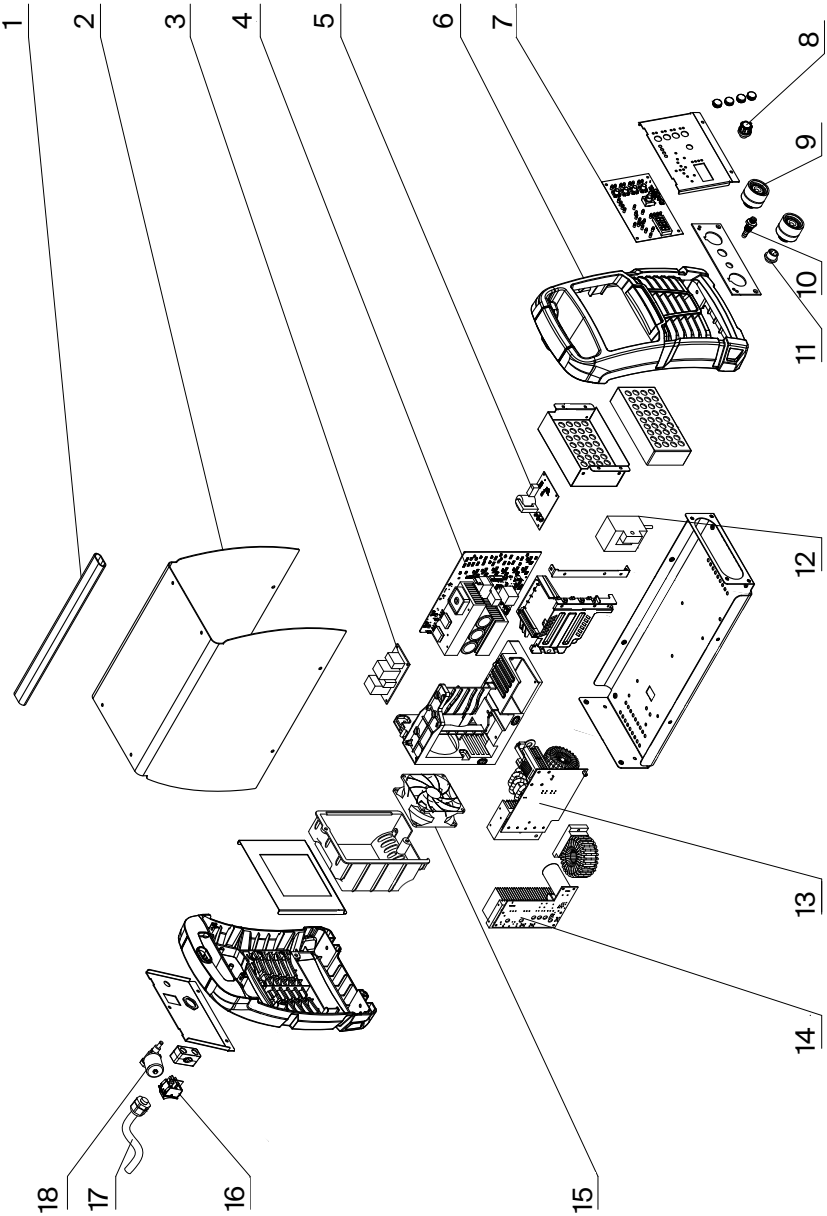

Fig 14 Weldarc 200 DC Power Source Assembly

WELDARC 200DC PARTS LIST

Item #	Part #	Description	Qty
1	M0109	Handle	1
2	PAN178	Metal Cover	1
3	PWA098	Emc Filter Board	1
4	PWA077	IGBT Inverter Board	1
5	PWA078	High Frequency Board	1
6	M0110	Front Plastic Panel	2
7	PWA076	Front Panel Control Pcb	1
8	M0104	Potentiometer Knob	1
9	CX58	Panel Mount Dinse Socket	2
10	M0094	Argon Gas Connector M10	1
11	E0079	Socket 5 Pin	1
12	L0035	Current Sensor	1
13	PWA060	Rectifier Board	1
14	PWA079	PFC Board	1
15	FAN021	Fan	1
16	E0078	Rocker Switch	1
17	N/A	Power Cable 2.5mm^2	1
18	E0100	Gas Valve	1
19	REG003	Argon Regulator	1
20	CLA002	Work Clamp	1
21	TIG010	TIG Torch	1

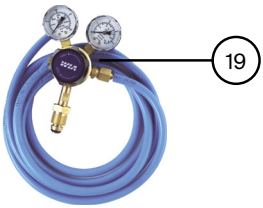

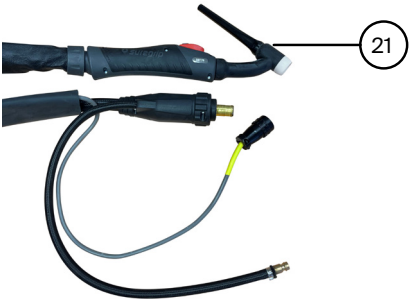

13 ASSEMBLY AND PARTS LIST – TORCH

Part #	Description	Qty
10N31	Collet Body 1.6mm	1
10N32	Collet Body 2.4mm	1
10N28	Collet Body 3.2mm	1
10N23	Collet 1.6mm	1
10N24	Collet 2.4mm	1
10N25	Collet 3.2mm	1
10N50	Ceramic Nozzle Size 4 (6mm)	1
10N49	Ceramic Nozzle Size 5 (8mm)	1
10N48	Ceramic Nozzle Size 6 (10mm)	1
10N47	Ceramic Nozzle Size 7 (11mm)	1
10N46	Ceramic Nozzle Size 8 (12.5mm)	1
57Y04	Short Back Cap	1
57Y03	Medium Back Cap	1
57Y02	Long Back Cap	1
E0087	Cable Plug	1
M0131	Snap Gas Connector	1

14 AUSTRALIAN WARRANTY INFORMATION

WIA Weldmatic MIG & Weldarc MMA Equipment

3 Year Gold Shield Warranty Statement

Effective 1st January 2022

Welding Industries of Australia (WIA) warrants to the original retail purchaser that the Weldmatic welding machine purchased (Product) will be free from defects in materials and workmanship for a period of 3 years from the date of purchase of the Product by the customer. If a defect in material or workmanship becomes evident during that period, Welding Industries of Australia will, at its option, either:

- Repair the Product (or pay for the costs of repair of the Product); or
- Replace the Product.

In the event of such a defect, the customer should return the product to the original place of purchase, with proof of purchase, or contact Welding Industries of Australia on 1300 300 884 to locate an authorised service agent.

Products presented for repair may be replaced by refurbished products of the same type rather than being repaired. Refurbished parts may be used to repair the product. Replacement of the product or any part does not extend or restart the Warranty Term. The repair of your products may result in the loss of any user-generated data. Please ensure that you have made a copy of any data saved on your product.

Any handling and transportation costs (and other expenses) incurred in claiming under this warranty are not covered by this warranty and will not be borne by Welding Industries of Australia.

Welding Industries of Australia will return the replacement product, if original found to be faulty, freight free to the customer.

This warranty covers the Weldarc power source only, and does not extend to the accessories included in the original purchase package.

The obligation of Welding Industries of Australia under this warranty is limited to the circumstances set out above and is subject to:

- The customer being able to provide proof of purchase of the Product and the purchase price paid for the Product;
- The relevant defect in materials or workmanship;
- The Product not having been altered, tampered with or otherwise dealt with by any person in a manner other than as intended in respect of the relevant Product; and
- The Product not having been used or applied in a manner that is contrary to customary usage or application for the relevant Product or contrary to any stated instructions or specification of Welding Industries of Australia.

For products purchased in Australia

Our goods come with guarantees that cannot be excluded under the Australian Consumer Law. You are entitled to a replacement or refund for a major failure and for compensation for any other reasonably foreseeable loss or damage. You are also entitled to have the goods repaired or replaced if the goods fail to be of acceptable quality and the failure does not amount to a major failure. The benefits given by this warranty are in addition to other rights and remedies which may be available to the customer under any law in relation to goods and services to which this warranty relates.

Warranty provided by:

Welding Industries of Australia
(ABN 63 004 235 063)
A Division of ITW Australia Pty Ltd

5 Allan Street, Melrose Park
South Australia 5039

Ph: 1300 300 884
Email: info@welding.com.au
Web: www.welding.com.au

15 NEW ZEALAND WARRANTY INFORMATION

WIA Weldmatic MIG &
Weldarc MMA Equipment

3 Year Gold Shield Warranty Statement

Effective 1st January 2022

In the event of defects listed in the Australian warranty conditions, the customer should return the Product to the original place of purchase, with proof of purchase, or contact Customer Service on 0800 9353 9355.

The warranty shall not apply to parts that fail due to normal wear.

For customers located in New Zealand, you can contact:

Weldwell New Zealand
Division of ITW New Zealand

59 Thames Street
Napier 4110
New Zealand

Ph: 0800 9353 9355
Email: info@weldwell.co.nz
Web: www.weldwell.co.nz

NOTES:

NOTES:

NOTES:

WELDING INDUSTRIES AUSTRALIA

A Division of ITW Australia Pty Ltd
ABN: 63 004 235 063

1300 300 884
Email: info@welding.com.au
welding.com.au

WELDWELL NEW ZEALAND

A Division of ITW New Zealand
NZBN: 9 429 039 833 129
GST NO: 080 177 186

0800 9353 9355
Email: info@weldwell.co.nz

weldwell.co.nz

MC113-40 RevB